US00D805848S

(12) United States Design Patent

Kerr

(10) Patent No.: US D805,848 S
(45) Date of Patent: ** Dec. 26, 2017

(54) **TRAY**

(71) Applicant: **Peter Kerr**, Seattle, WA (US)

(72) Inventor: **Peter Kerr**, Seattle, WA (US)

(**) Term: **15 Years**

(21) Appl. No.: **29/598,465**

(22) Filed: **Mar. 27, 2017**

(51) **LOC (10) Cl.** **07-01**

(52) **U.S. Cl.**
USPC **D7/554.4**

(58) **Field of Classification Search**
USPC D6/582; D7/368, 388, 396.1, 397, 402, D7/500, 550.1, 554.3, 554.4
CPC A47G 23/06; A47G 23/0608; B65D 1/00; B65D 1/34; B60N 3/04; B60N 3/044
See application file for complete search history.

(56) **References Cited**

U.S. PATENT DOCUMENTS

D247,649	S	*	3/1978	Carroll	D3/314
D271,557	S	*	11/1983	Schwarzli	D7/363
D380,938	S		7/1997	Indekeu	
D400,404	S	*	11/1998	Indekeu	D3/304
D402,850	S		12/1998	Davis	
5,862,933	A	*	1/1999	Neville	A47B 23/002 108/43
5,915,561	A	*	6/1999	Lorenzana	A47G 23/0608 206/562
D418,909	S	*	1/2000	Mockett	D23/308
D433,662	S	*	11/2000	Fanshaw	D12/407
D436,495	S		1/2001	Ferrer	
D440,117	S	*	4/2001	Claffy	D7/553.2
D455,317	S		4/2002	Thurlow	
D462,231	S	*	9/2002	Kari	D7/354
D471,405	S		3/2003	Wellner	
D472,430	S		4/2003	Scherer	
D501,760	S		2/2005	Bukowski	
D519,278	S		4/2006	Boerma	
D520,304	S		5/2006	Kilders	
D522,314	S	*	6/2006	Warner	D7/545
D539,075	S	*	3/2007	Schuler	D7/354
D543,075	S		5/2007	Ablo	
D550,043	S		9/2007	Brattoli	
D565,905	S		4/2008	Valderrama	
D573,412	S		7/2008	Ablo	
D573,940	S	*	7/2008	Heneghan	D12/425
D575,590	S	*	8/2008	Ablo	D7/586
D577,223	S	*	9/2008	Durmon, Jr.	D6/406.5
D578,811	S	*	10/2008	Gervasi	D6/705
D584,923	S	*	1/2009	Scherer	D7/554.3
D631,276	S	*	1/2011	White	D6/582
D677,154	S	*	3/2013	Miller	D9/424
D700,003	S	*	2/2014	Lagsdin	D7/354
D710,059	S	*	7/2014	Risser	D30/121
D710,123	S	*	8/2014	Wright	D6/406.3
D730,588	S	*	5/2015	Risser	D30/121
D743,185	S	*	11/2015	Elliott	D6/582

(Continued)

Primary Examiner — Kelley Donnelly
(74) *Attorney, Agent, or Firm* — Michael J. Feigin, Esq.; Feigin and Fridman

(57) **CLAIM**

The ornamental design for a tray, as shown and described.

DESCRIPTION

FIG. **1** shows a top and side perspective view of a tray.
FIG. **2** shows a bottom and side perspective view thereof.
FIG. **3** shows a top plan view thereof.
FIG. **4** shows a bottom plan view thereof.
FIG. **5** shows a long side view thereof, the other long side being a mirror image thereof.
FIG. **6** shows a short side view thereof, the other short side being a mirror image thereof; and,
FIG. **7** shows a cross section of section line **7-7** of FIG. **3**.

1 Claim, 5 Drawing Sheets

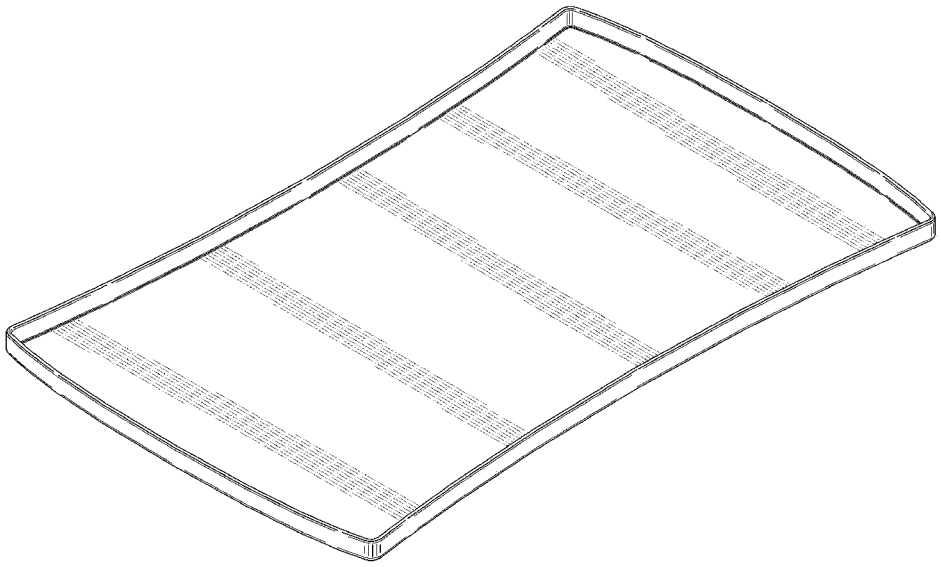

(56) **References Cited**

U.S. PATENT DOCUMENTS

D750,848	S	*	3/2016	Risser	D30/129
D788,538	S	*	6/2017	Vukkisila	D7/587
2009/0239724	A1	*	9/2009	White	A63B 21/4037 482/142

* cited by examiner

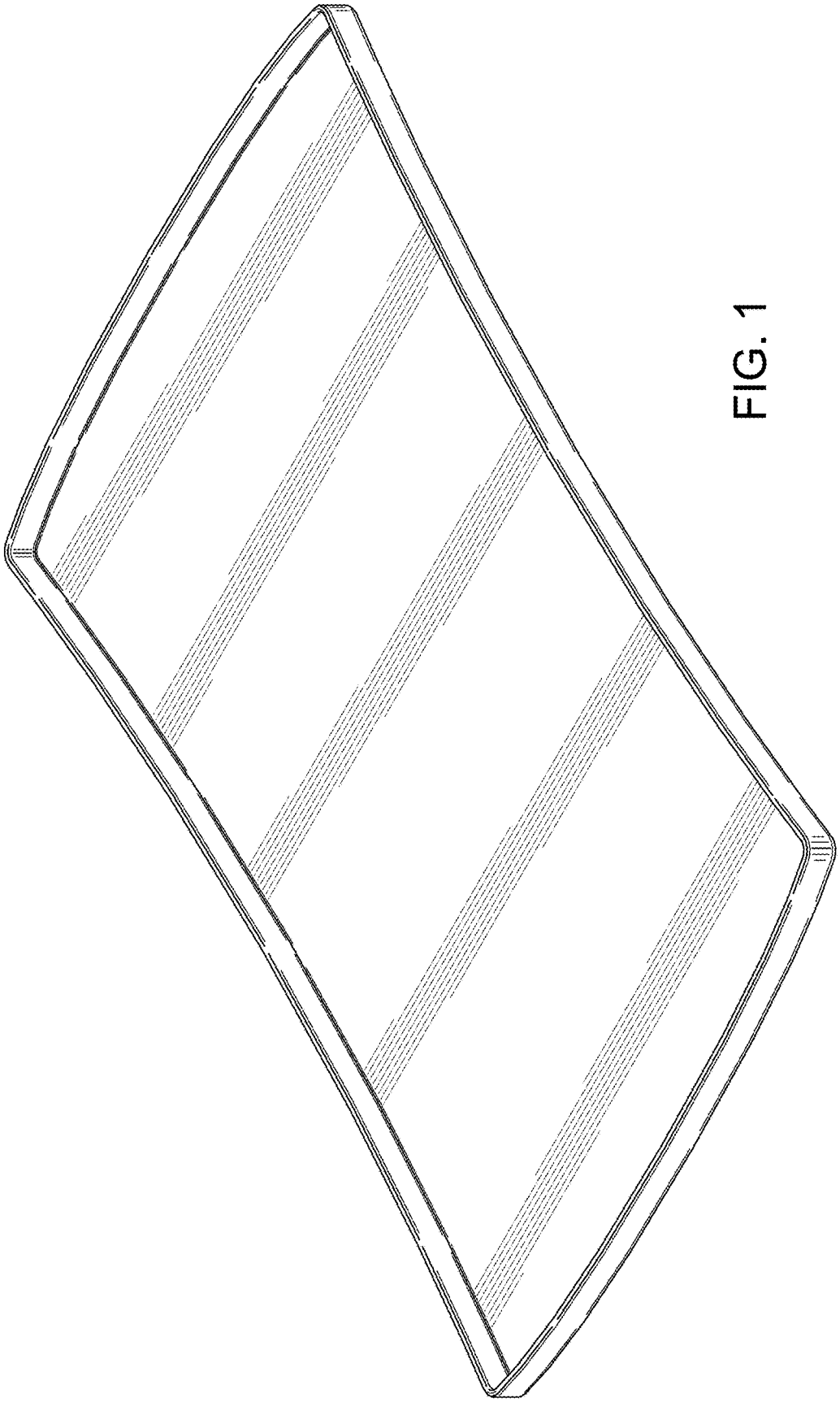

FIG. 1

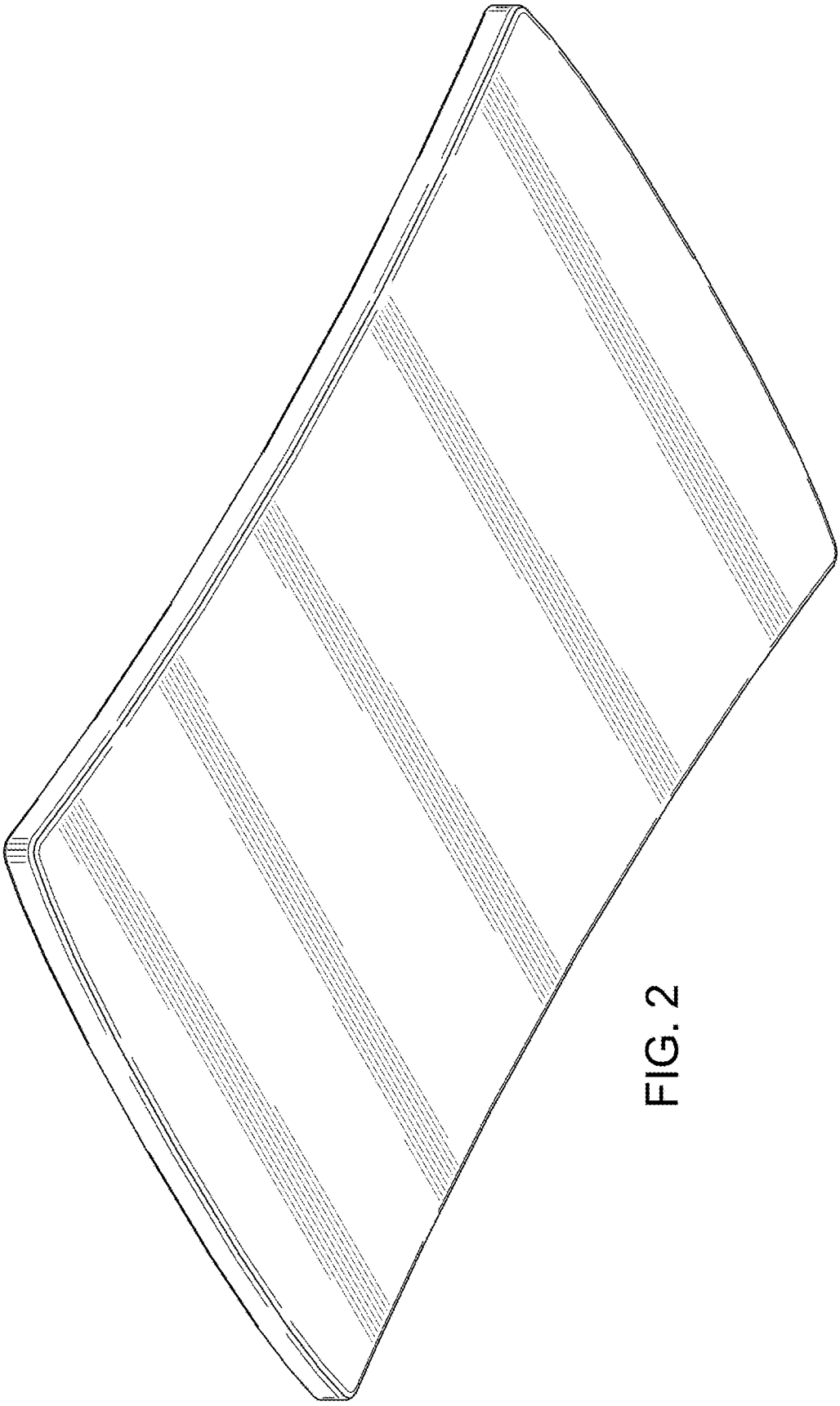

FIG. 2

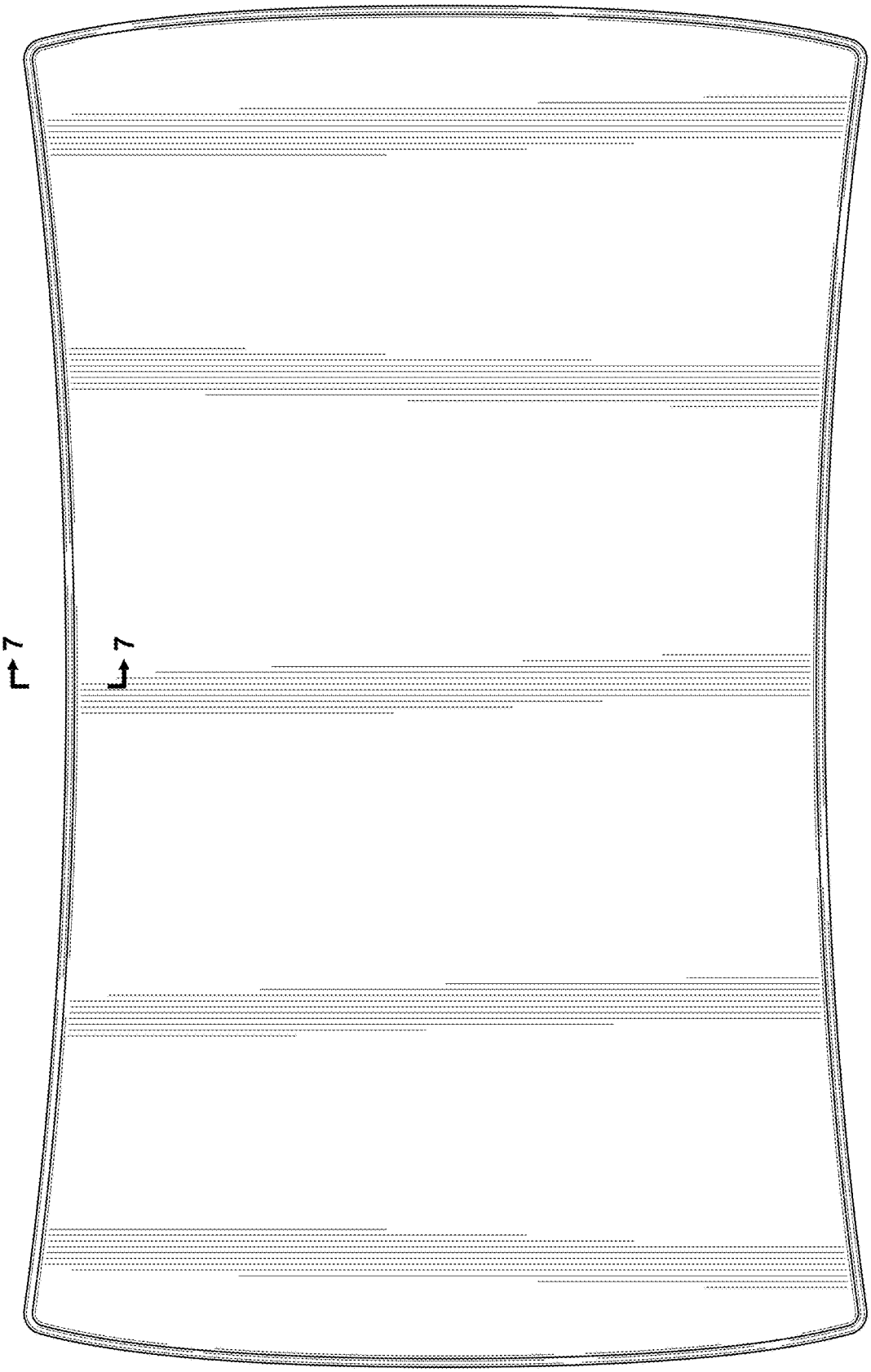

FIG. 3

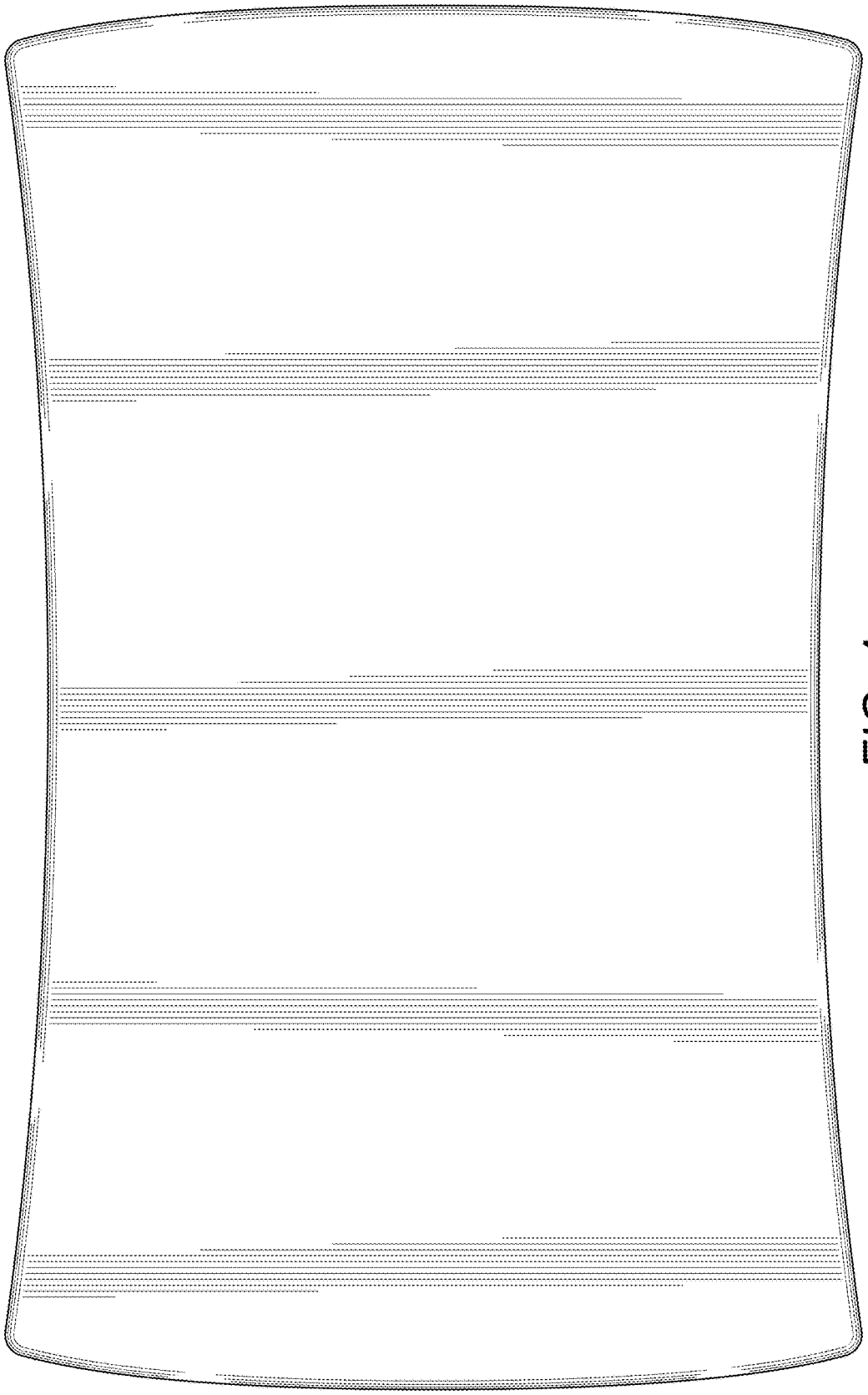

FIG. 4

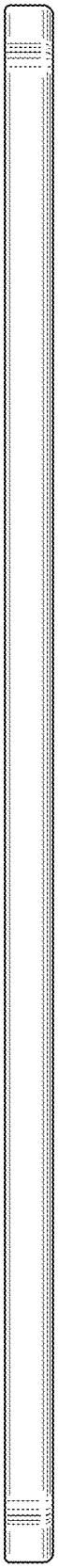

FIG. 5

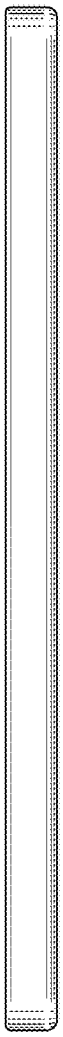

FIG. 6

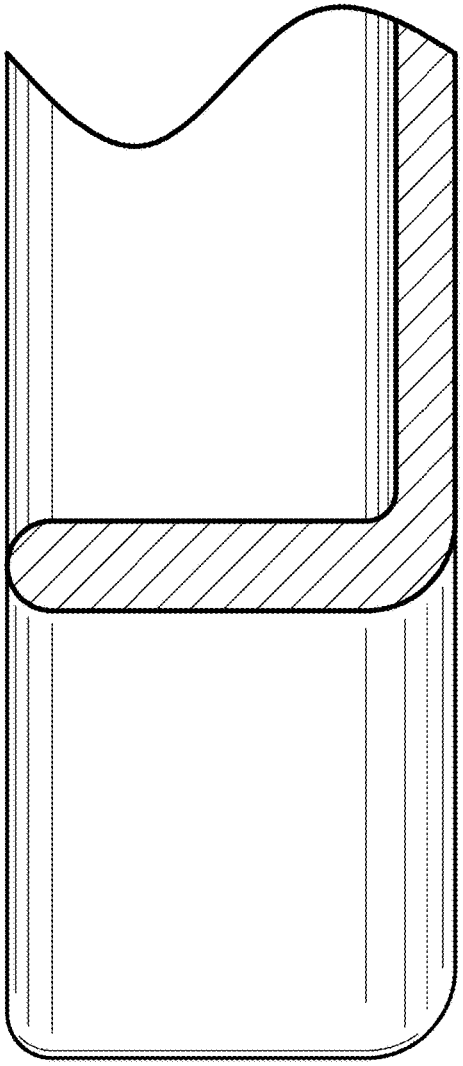

FIG. 7